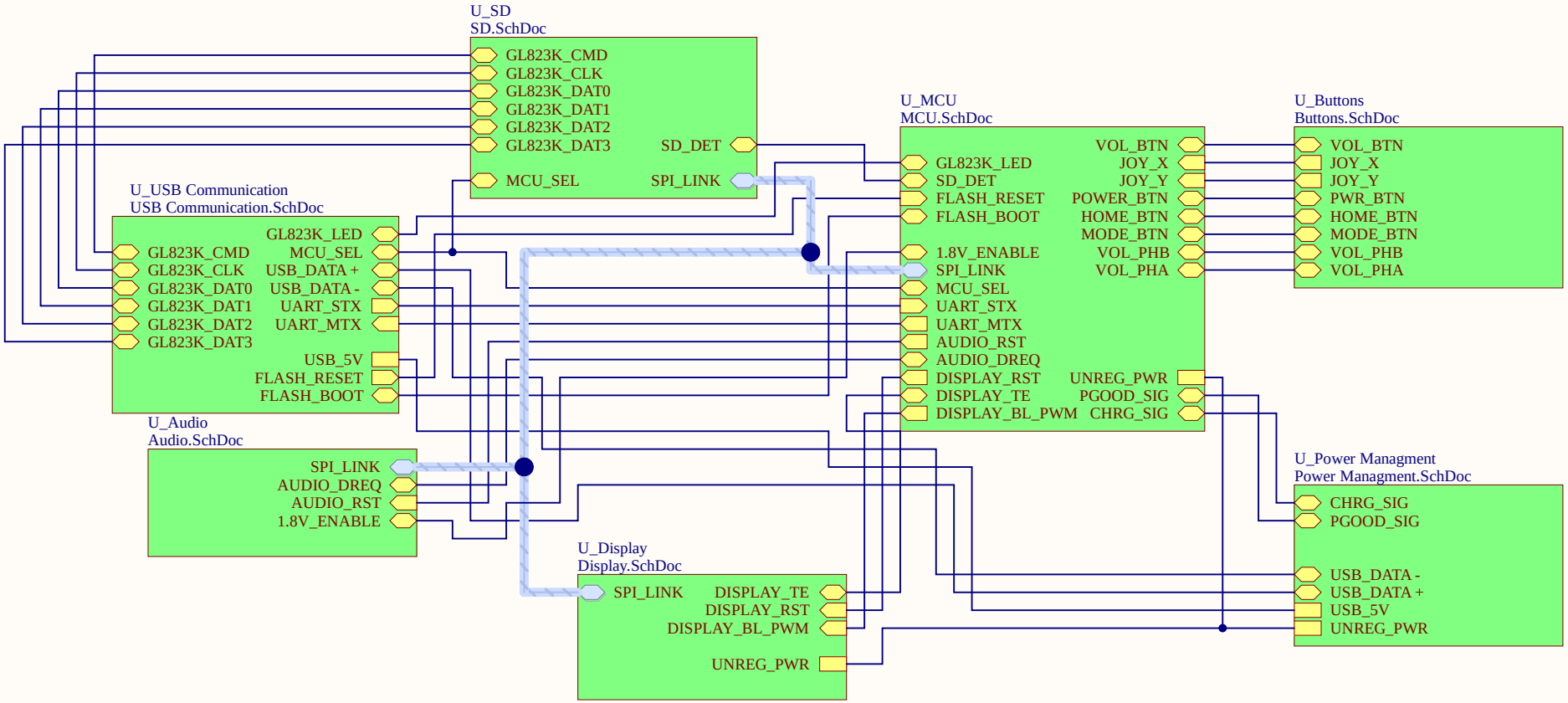

Title	Master Sheet		
Size A	Number 1		Revision 1
Date: 4/15/2026		Sheet of 1/8	
File: C:\Users\..\Master Sheet.SchDoc		Drawn By: William Kendrick Coleman	
		ESD Build	

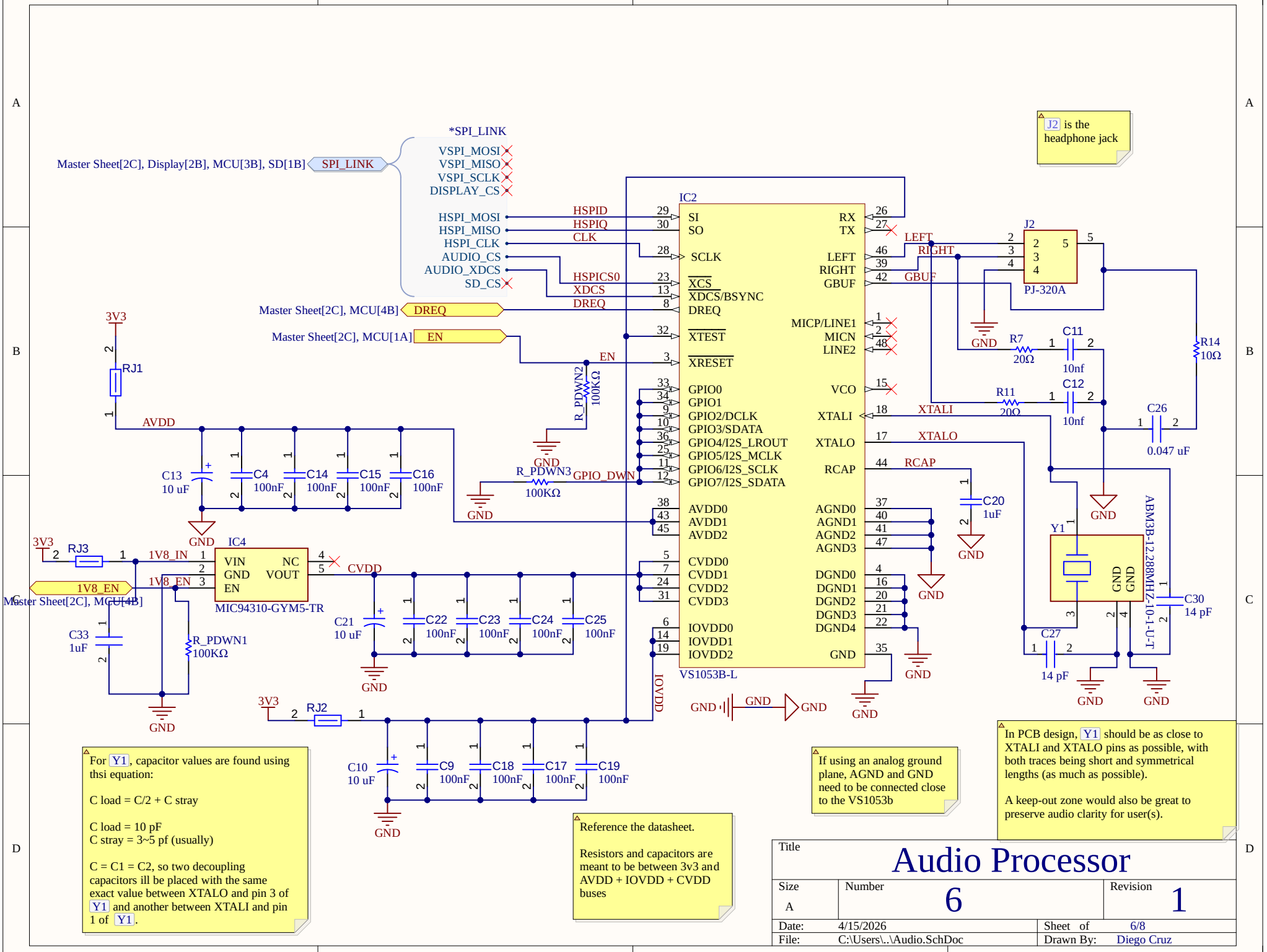
*SPI_LINK
Master Sheet[2C], Display[2B], MCU[3B], SD[1B]
SPI_LINK
VSPI_MOSI
VSPI_MISO
VSPI_SCLK
DISPLAY_CS
HSPI_MOSI
HSPI_MISO
HSPI_CLK
AUDIO_CS
AUDIO_XDCS
SD_CS
Master Sheet[2C], MCU[4B]
DREQ
Master Sheet[2C], MCU[1A]
EN
IC2
SI
SO
SCLK
XCS
XDCS/BSYNC
DREQ
XTEST
XRESET
GPIO0
GPIO1
GPIO2/DCLK
GPIO3/SDATA
GPIO4/I2S_LROUT
GPIO5/I2S_MCLK
GPIO6/I2S_SCLK
GPIO7/I2S_SDATA
AVDD0
AVDD1
AVDD2
CVDD0
CVDD1
CVDD2
CVDD3
IOVDD0
IOVDD1
IOVDD2
RX
TX
LEFT
RIGHT
GBUF
MICP/LINE1
MICN
LINE2
VCO
XTALI
XTALO
RCAP
AGND0
AGND1
AGND2
AGND3
DGND0
DGND1
DGND2
DGND3
DGND4
GND
VS1053B-L
HSPID
HSPIQ
CLK
HSPICS0
XDCS
DREQ
EN
GPIO_DWN
LEFT
RIGHT
GBUF
XTALI
XTALO
RCAP
IOVDD
J2 is the headphone jack
J2
PJ-320A
R7
20Ω
C11
10nf
R11
20Ω
C12
10nf
R14
10Ω
C26
0.047 uF
C20
1uF
Y1
ABM3B-12.288MHZ-10-1-U-T
C30
14 pF
C27
14 pF
3V3
RJ1
AVDD
C13
10 uF
C4
100nF
C14
100nF
C15
100nF
C16
100nF
R_PDWN2
100KΩ
R_PDWN3
100KΩ
3V3
RJ3
1V8_IN
1V8_EN
Master Sheet[2C], MCU[4B]
IC4
VIN
GND
EN
NC
VOUT
MIC94310-GYM5-TR
CVDD
C21
10 uF
C22
100nF
C23
100nF
C24
100nF
C25
100nF
C33
1uF
R_PDWN1
100KΩ
3V3
RJ2
C10
10 uF
C9
100nF
C18
100nF
C17
100nF
C19
100nF
GND
For Y1, capacitor values are found using thsi equation:
C load = C/2 + C stray
C load = 10 pF
C stray = 3~5 pf (usually)
C = C1 = C2, so two decoupling capacitors ill be placed with the same exact value between XTALO and pin 3 of Y1 and another between XTALI and pin 1 of Y1.
Reference the datasheet.
Resistors and capacitors are meant to be between 3v3 and AVDD + IOVDD + CVDD buses
If using an analog ground plane, AGND and GND need to be connected close to the VS1053b
In PCB design, Y1 should be as close to XTALI and XTALO pins as possible, with both traces being short and symmetrical lengths (as much as possible).
A keep-out zone would also be great to preserve audio clarity for user(s).
Title
Audio Processor
Size
A
Number
6
Revision
1
Date: 4/15/2026
Sheet of 6/8
File: C:\Users\..\Audio.SchDoc
Drawn By: Diego Cruz

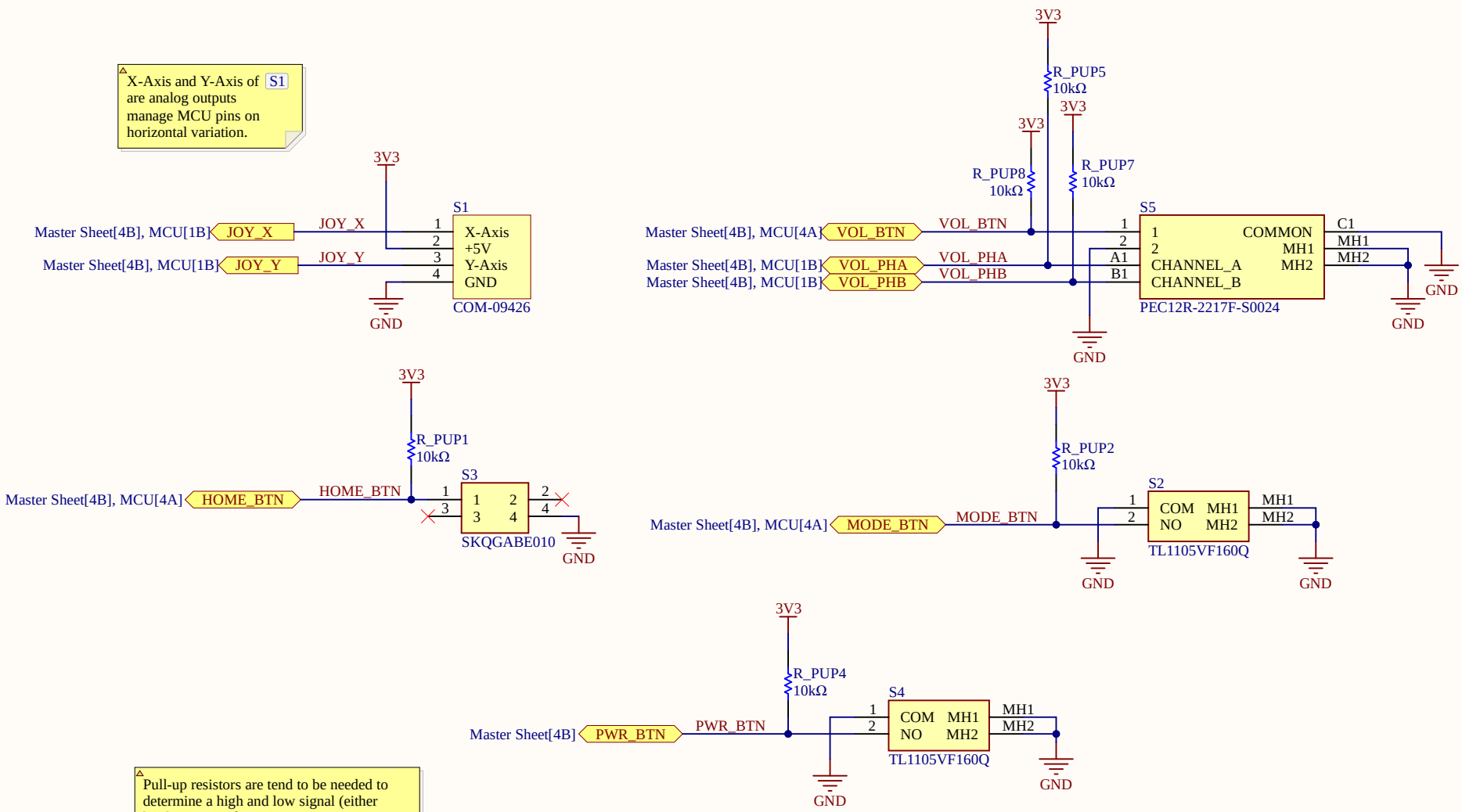

Pull-up resistors are tend to be needed to determine a high and low signal (either hardware or software).

The general buttons are normally open (NO), so the circuit closes only when the button is pressed.

For our pin space issue:

(1) For buttons we could use one port and put resistors on each button's wire, sending a different voltage depending on what was pressed.

(2) An I/O expander can also be brought in. It connects to the I2C interface on the MCu and adds 8-16 pins.

Title	Buttons		
Size A	Number 3		Revision 1
Date: 4/15/2026		Sheet of 3/8	
File: C:\Users\..\Buttons.SchDoc		Drawn By: William Kendrick Coleman	

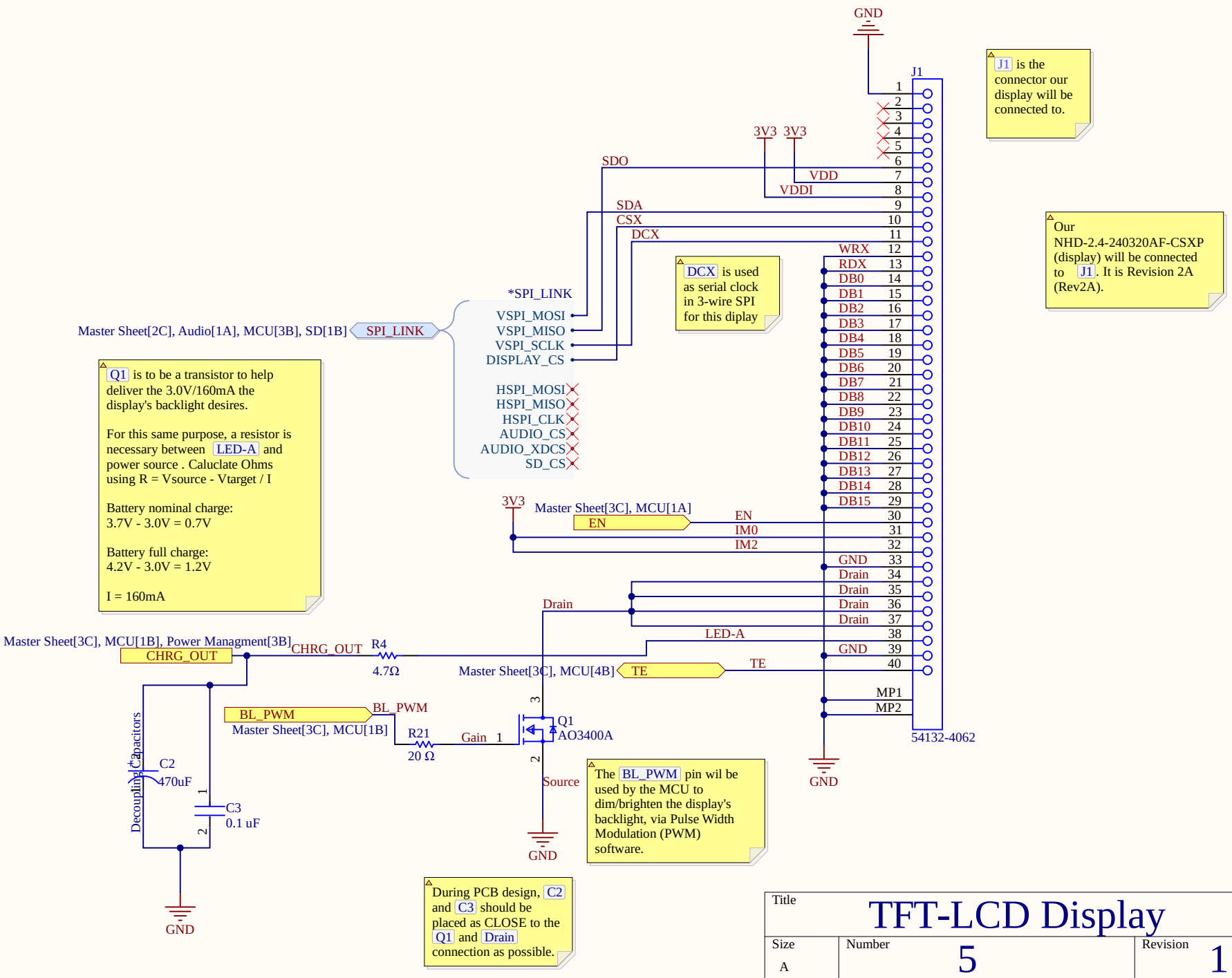

Title	TFT-LCD Display		
Size A	Number 5		Revision 1
Date: 4/15/2026		Sheet of 5/8	
File: C:\Users\..\Display.SchDoc		Drawn By: William Kendrick Coleman	

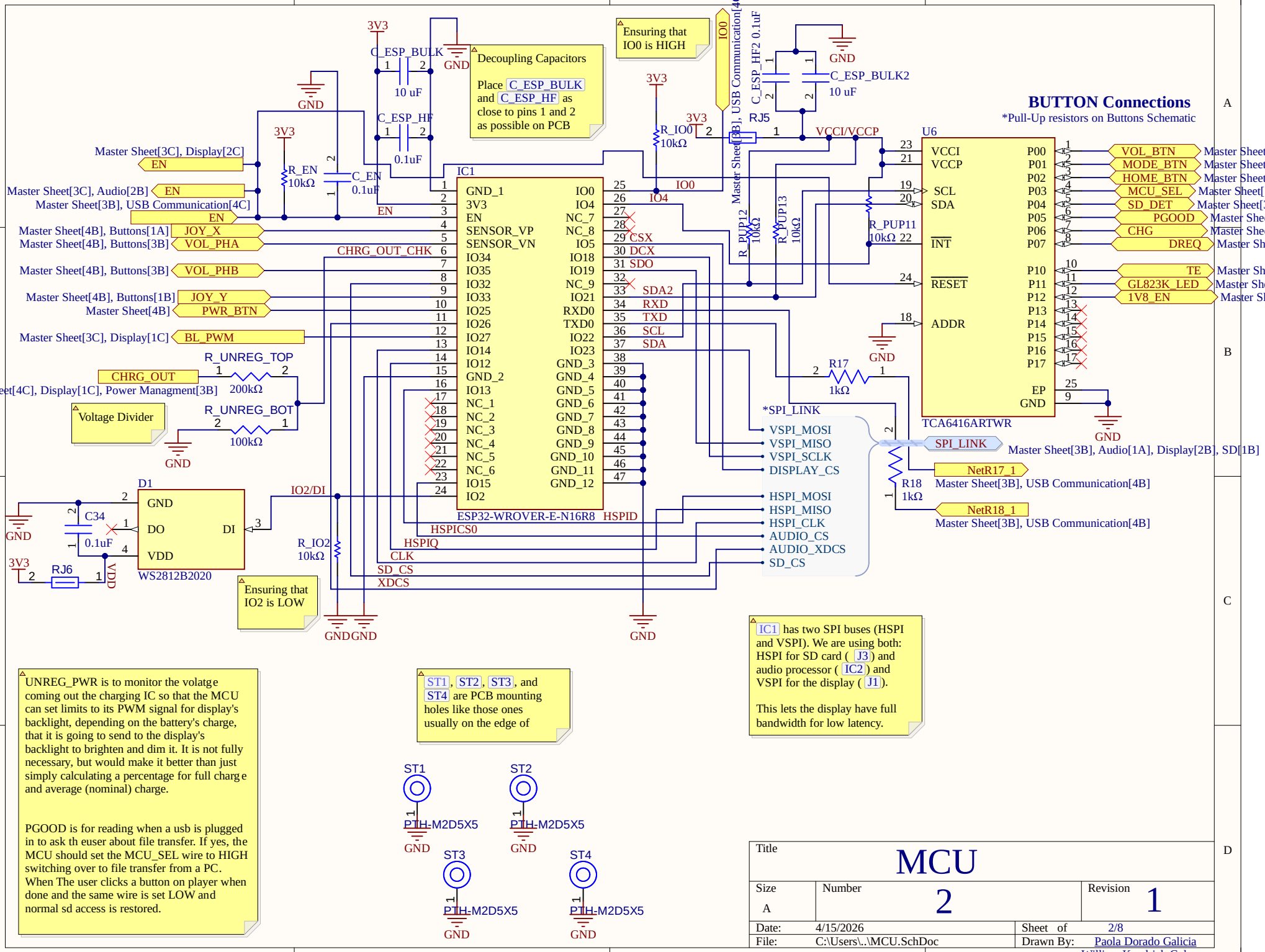
Decoupling Capacitors
Place C_ESP_BULK and C_ESP_HF as close to pins 1 and 2 as possible on PCB
Ensuring that IO0 is HIGH
Ensuring that IO2 is LOW
Voltage Divider
BUTTON Connections
*Pull-Up resistors on Buttons Schematic
IC1
ESP32-WROVER-E-N16R8
U6
TCA6416ARTWR
D1
WS2812B2020
RJ5
RJ6
*SPI_LINK
UNREG_PWR is to monitor the volatge coming out the charging IC so that the MCU can set limits to its PWM signal for display's backlight, depending on the battery's charge, that it is going to send to the display's backlight to brighten and dim it. It is not fully necessary, but would make it better than just simply calculating a percentage for full charge and average (nominal) charge.
PGOOD is for reading when a usb is plugged in to ask th euser about file transfer. If yes, the MCU should set the MCU_SEL wire to HIGH switching over to file transfer from a PC. When The user clicks a button on player when done and the same wire is set LOW and normal sd access is restored.
ST1, ST2, ST3, and ST4 are PCB mounting holes like those ones usually on the edge of
IC1 has two SPI buses (HSPI and VSPI). We are using both: HSPI for SD card (J3) and audio processor (IC2) and VSPI for the display (J1).
This lets the display have full bandwidth for low latency.
Title
MCU
Size
A
Number
2
Revision
1
Date: 4/15/2026
Sheet of 2/8
File: C:\Users\..\MCU.SchDoc
Drawn By: Paola Dorado Galicia
William Kendrick Coleman

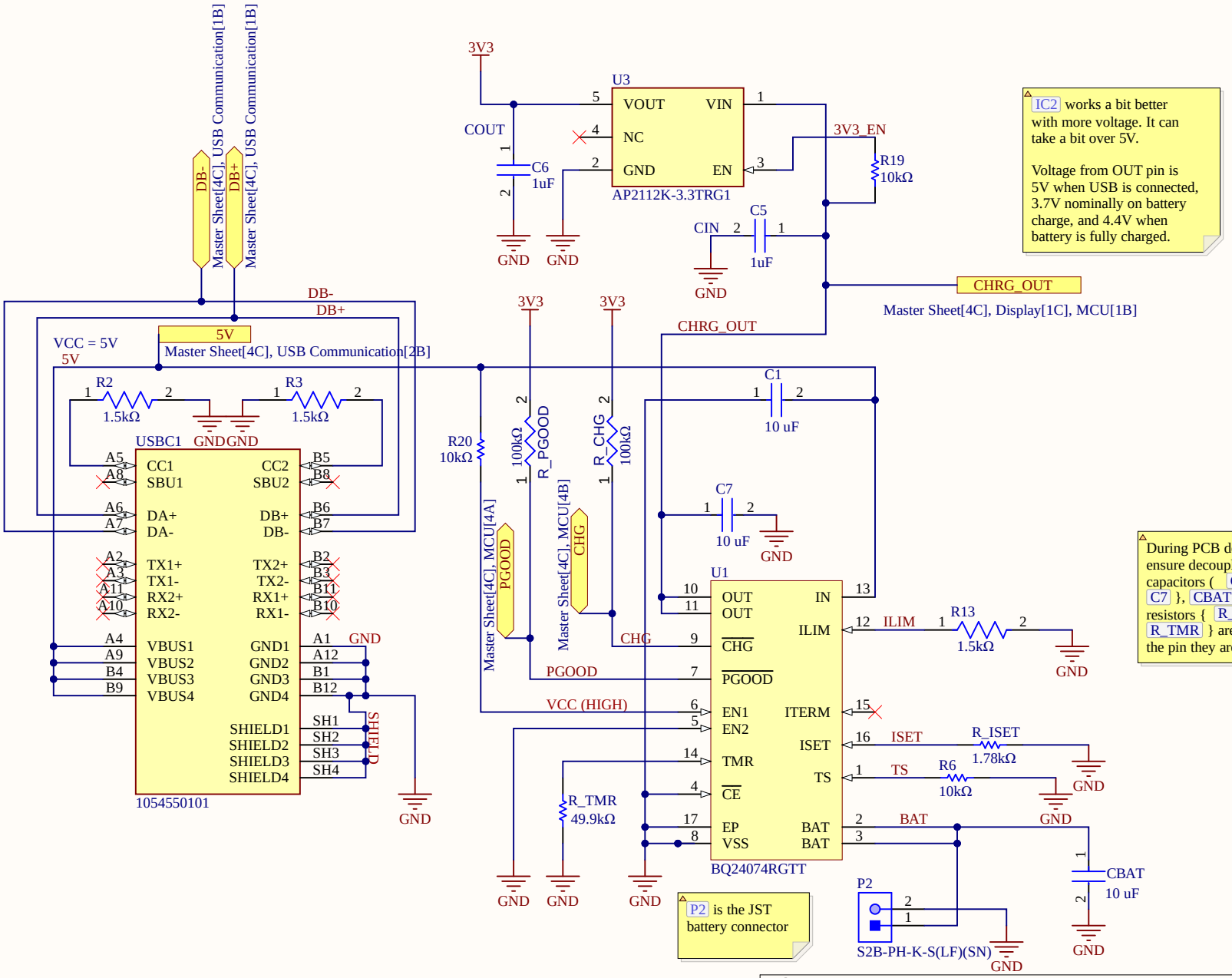

Title	Power Managment & Sources	
Size A	Number 8	Revision 1
Date: 4/15/2026	Sheet of 8/8	
File: C:\Users\..\Power Managment.SchDoc	Drawn By: Paola Dorado Galicia	

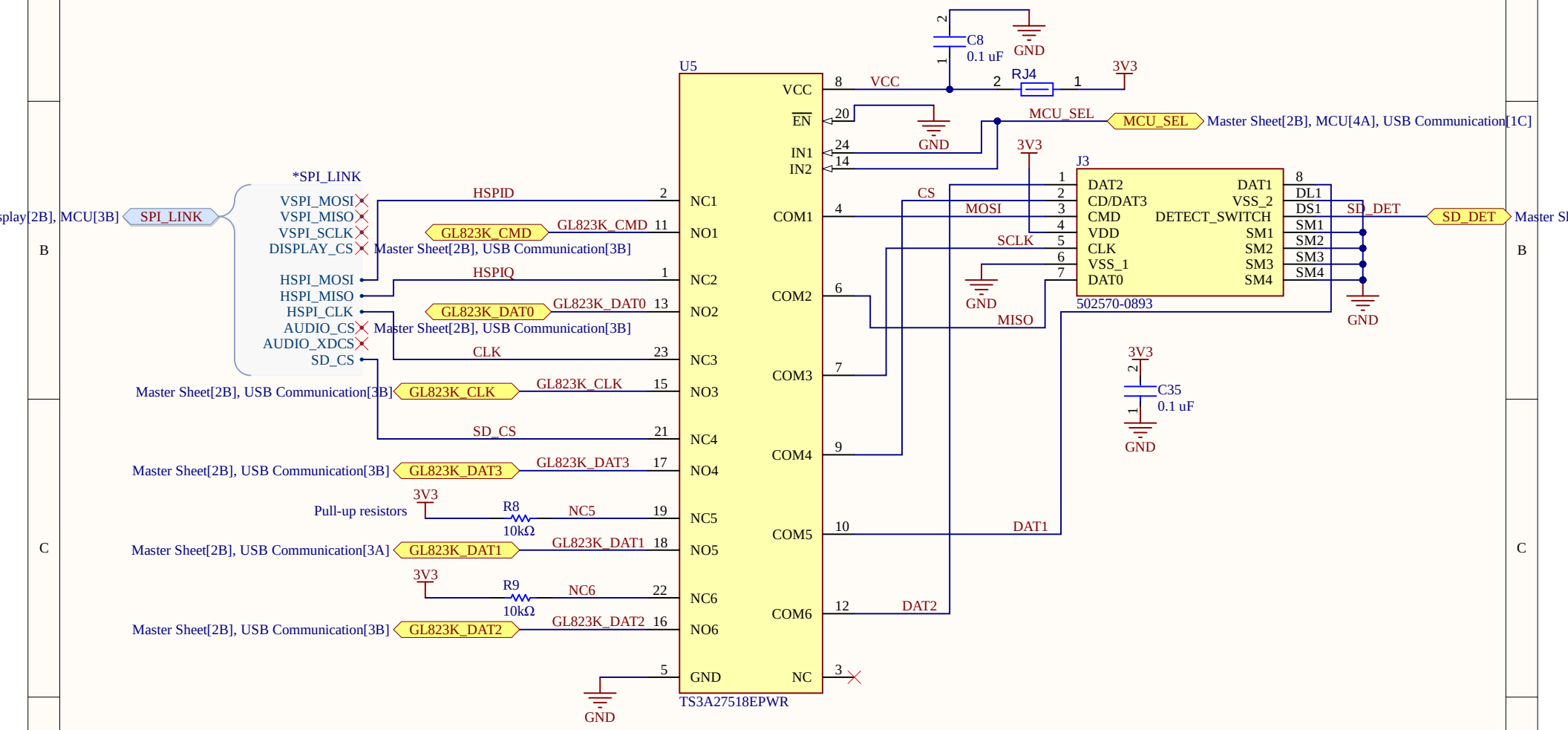

Title	SD Card		
Size A	Number 4		Revision 1
Date: 4/15/2026		Sheet of 4/8	
File: C:\Users\..\SD.SchDoc		Drawn By: William Kendrick Coleman	

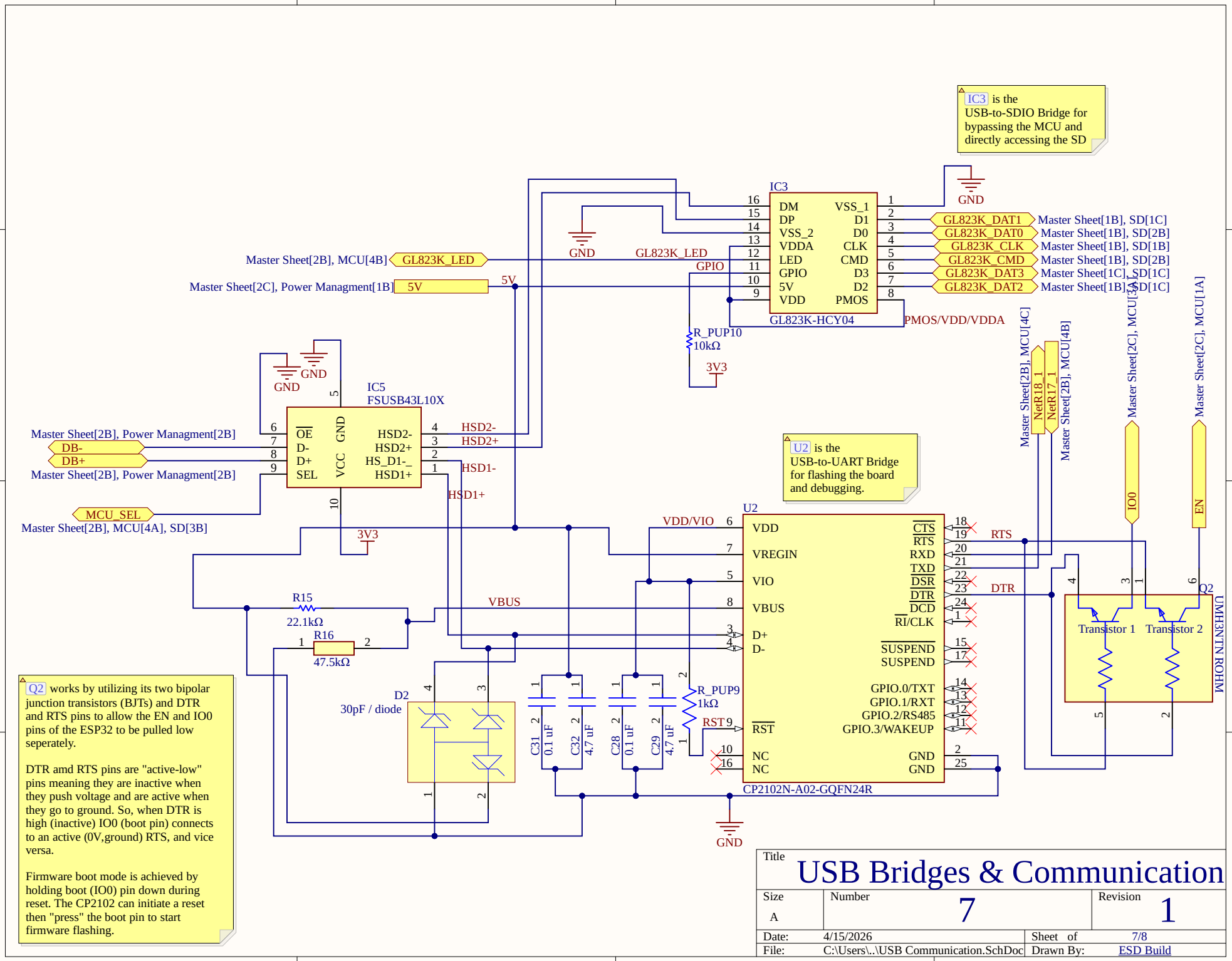
IC3 is the USB-to-SDIO Bridge for bypassing the MCU and directly accessing the SD
IC3
GL823K-HCY04
DM
DP
VSS_2
VDDA
LED
GPIO
5V
VDD
VSS_1
D1
D0
CLK
CMD
D3
D2
PMOS
GL823K_DAT1
GL823K_DAT0
GL823K_CLK
GL823K_CMD
GL823K_DAT3
GL823K_DAT2
Master Sheet[1B], SD[1C]
Master Sheet[1B], SD[2B]
Master Sheet[1B], SD[1B]
Master Sheet[1B], SD[2B]
Master Sheet[1C], SD[1C]
Master Sheet[1B], SD[1C]
Master Sheet[2B], MCU[4B]
GL823K_LED
Master Sheet[2C], Power Managment[1B]
5V
GND
PMOS/VDD/VDDA
R_PUP10
10kΩ
3V3
IC5
FSUSB43L10X
OE
D-
D+
SEL
GND
VCC
HSD2-
HSD2+
HS_D1-_
HSD1+
Master Sheet[2B], Power Managment[2B]
DB-
DB+
MCU_SEL
Master Sheet[2B], MCU[4A], SD[3B]
U2 is the USB-to-UART Bridge for flashing the board and debugging.
U2
VDD
VREGIN
VIO
VBUS
D+
D-
RST
NC
CTS
RTS
RXD
TXD
DSR
DTR
DCD
RI/CLK
SUSPEND
GPIO.0/TXT
GPIO.1/RXT
GPIO.2/RS485
GPIO.3/WAKEUP
CP2102N-A02-GQFN24R
VDD/VIO
VBUS
R_PUP9
1kΩ
R15
22.1kΩ
R16
47.5kΩ
D2
30pF / diode
C31 0.1 uF
C32 4.7 uF
C28 0.1 uF
C29 4.7 uF
Master Sheet[2B], MCU[4C]
Master Sheet[2B], MCU[4B]
NetR18_1
NetR17_1
Master Sheet[2C], MCU[3A]
Master Sheet[2C], MCU[1A]
IO0
EN
Q2
Transistor 1
Transistor 2
UMH3NTN ROHM
Q2 works by utilizing its two bipolar junction transistors (BJTs) and DTR and RTS pins to allow the EN and IO0 pins of the ESP32 to be pulled low seperately.
DTR amd RTS pins are "active-low" pins meaning they are inactive when they push voltage and are active when they go to ground. So, when DTR is high (inactive) IO0 (boot pin) connects to an active (0V,ground) RTS, and vice versa.
Firmware boot mode is achieved by holding boot (IO0) pin down during reset. The CP2102 can initiate a reset then "press" the boot pin to start firmware flashing.
Title
USB Bridges & Communication
Size
A
Number
7
Revision
1
Date: 4/15/2026
Sheet of 7/8
File: C:\Users\..\USB Communication.SchDoc
Drawn By: ESD Build